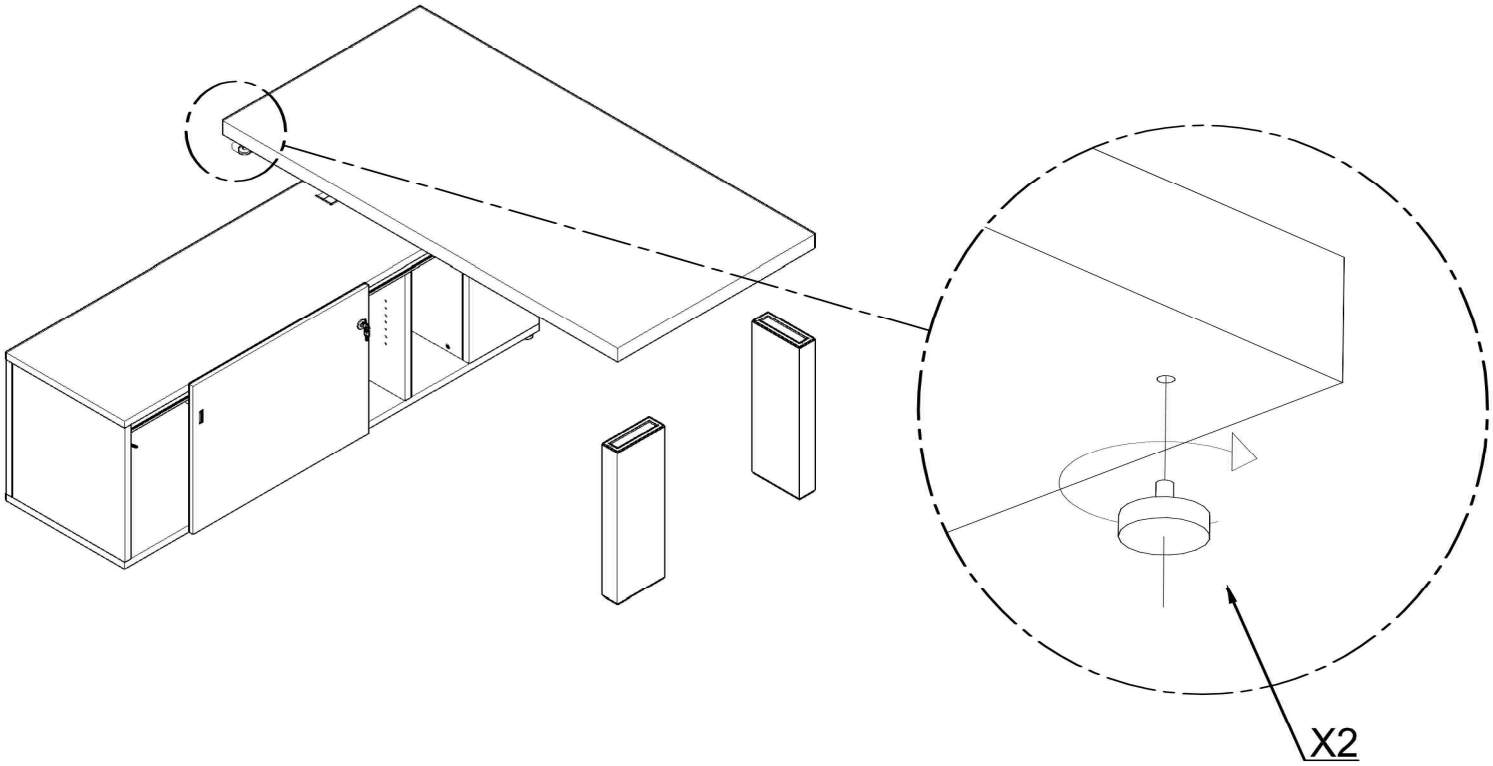
X2

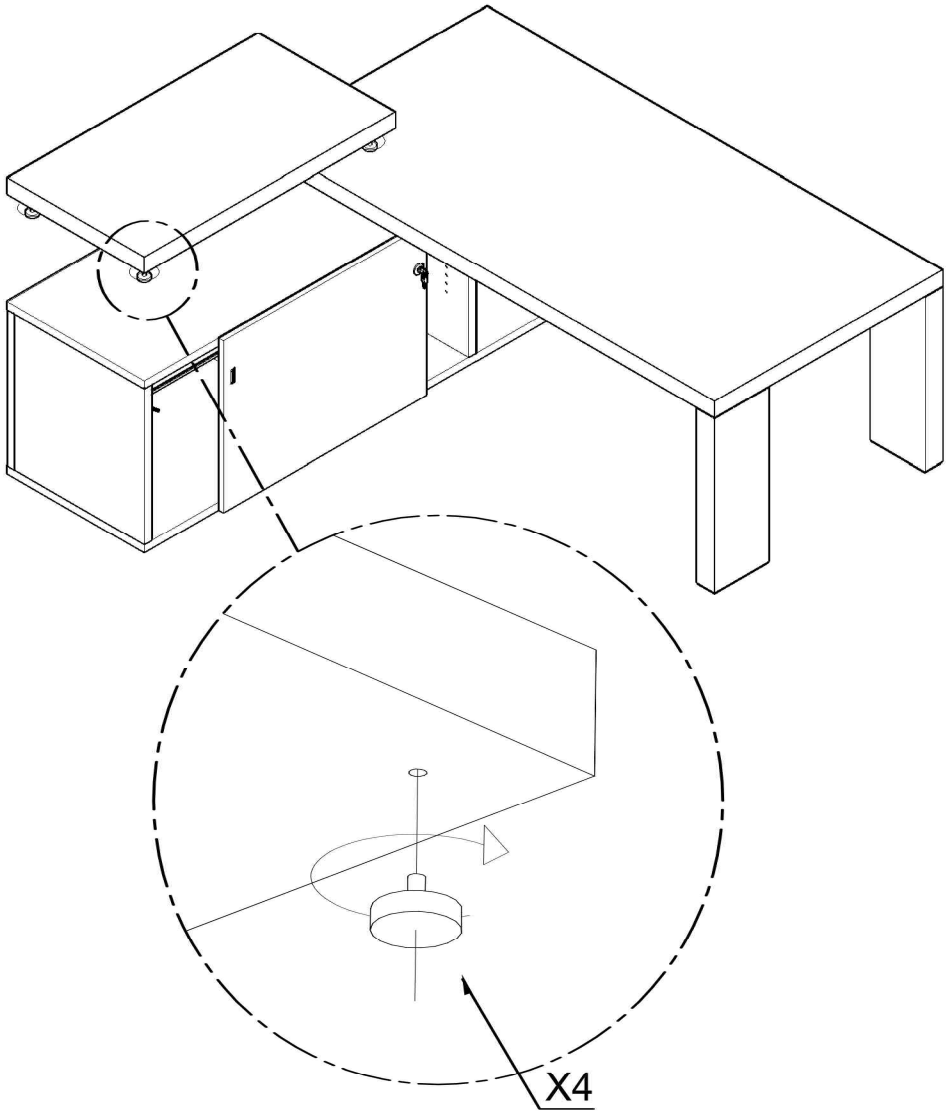
X4